Chlorine Ball Valves
Electrically Actuated

Hydro Instruments offers a line of integrally designed electric actuators for automated systems and control of remote or hard to reach valves.

The chlorine ball valves use an electric actuator; a geared motor that provides rotary output to power the rotary valve. Motion is achieved through the application of 120, 220 VAC or 12 VDC supply voltage. Rotary action is controlled through two limit switches (one for open and one for closed) located in the unit and in conjunction with two cams. Precise setting of either position is achieved by adjusting the cam to activate the switch at exactly the desired point in the rotary cycle.

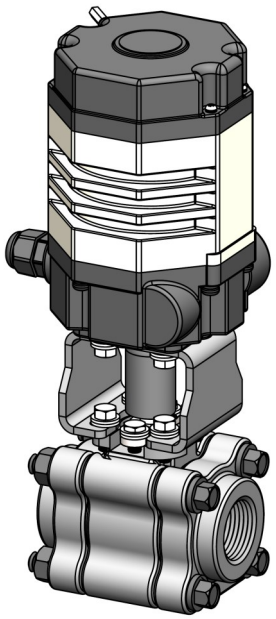

Specifications

Power	120 VAC	220 VAC	12 VDC
Motor Power	6W		
Rated Current	0.3A	0.15A	2A
Open/Close Time	15 seconds		
Torque	18 Nm	18 Nm	16 Nm
Insulating Resistance	100MΩ / 500VDC		
Withstand Voltage	1500VAC, one minute		
Protection Class	IP-67		
Ambient Temp.	-30° C ~ 60° C		
Fuse	1A	1A	3A

Ordering Information

Item No.	Power	Ball Valve Materials	Connection Type
CBVE-12V-M-3/4NPT	12VDC	Carbon steel body, Monel ball & stem	3/4” NPT
CBVE-12V-M-1NPT	12VDC	Carbon steel body, Monel ball & stem	1” NPT
CBVE-12V-M-1S	12VDC	Carbon steel body, Monel ball & stem	1” Socket
CBVE-120-M-3/4NPT	120VAC 50/60Hz	Carbon steel body, Monel ball & stem	3/4” NPT
CBVE-120-M-1NPT	120VAC 50/60Hz	Carbon steel body, Monel ball & stem	1” NPT
CBVE-120-M-1S	120VAC 50/60Hz	Carbon steel body, Monel ball & stem	1” Socket
CBVE-240-M-3/4NPT	220VAC 50/60Hz	Carbon steel body, Monel ball & stem	3/4” NPT
CBVE-240-M-1NPT	220VAC 50/60Hz	Carbon steel body, Monel ball & stem	1” NPT
CBVE-240-M-1S	220VAC 50/60Hz	Carbon steel body, Monel ball & stem	1” Socket

Hydro Instruments also offers a line of manual valves. For information on these assemblies, refer to the Chlorine Ball Valves—Manual sales bulletin.

For applications other than chlorine, sulfur dioxide or carbon dioxide gas, please contact Hydro Instruments.

600 Emlen Way, Telford, PA 18969 ● Telephone: (215) 799-0980 ● Fax: (215) 799-0984
US Toll Free: (888) 38-HYDRO ● www.hydroinstruments.com ● sales@hydroinstruments.com

Installation

Wiring Diagram for 120 & 220 VAC

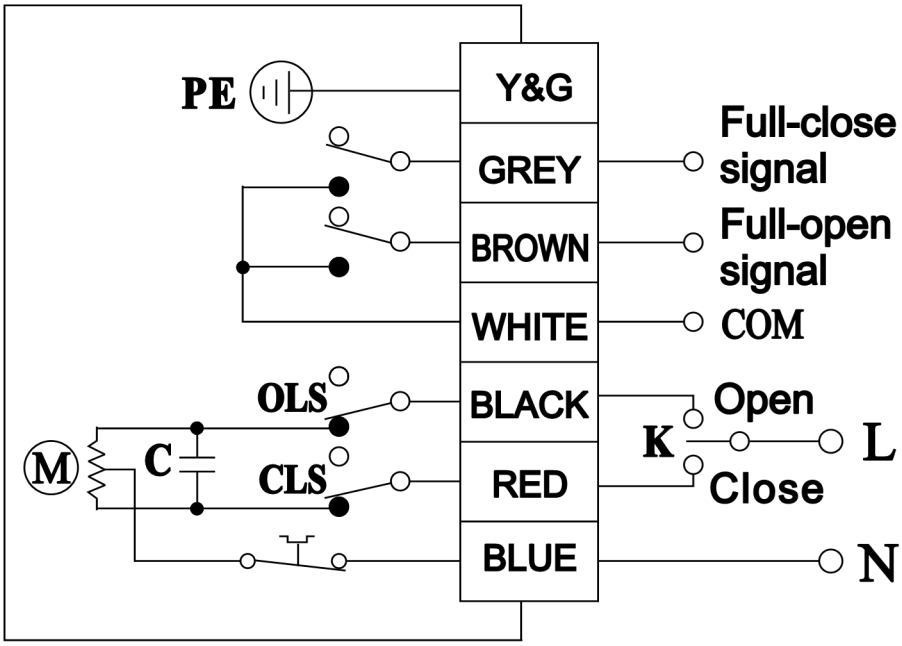

Wiring Diagram for 12VDC

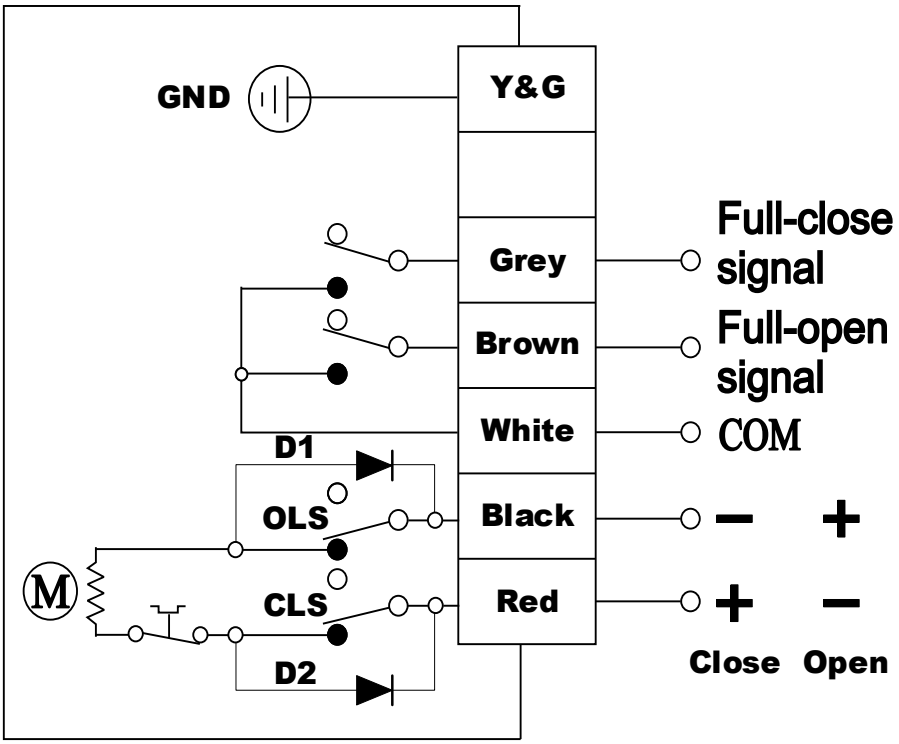

600 Emlen Way, Telford, PA 18969 ● Telephone: (215) 799-0980 ● Fax: (215) 799-0984
US Toll Free: (888) 38-HYDRO ● www.hydroinstruments.com ● sales@hydroinstruments.com