Ton Container Manifolds for Gas Withdrawal Systems

Design Considerations

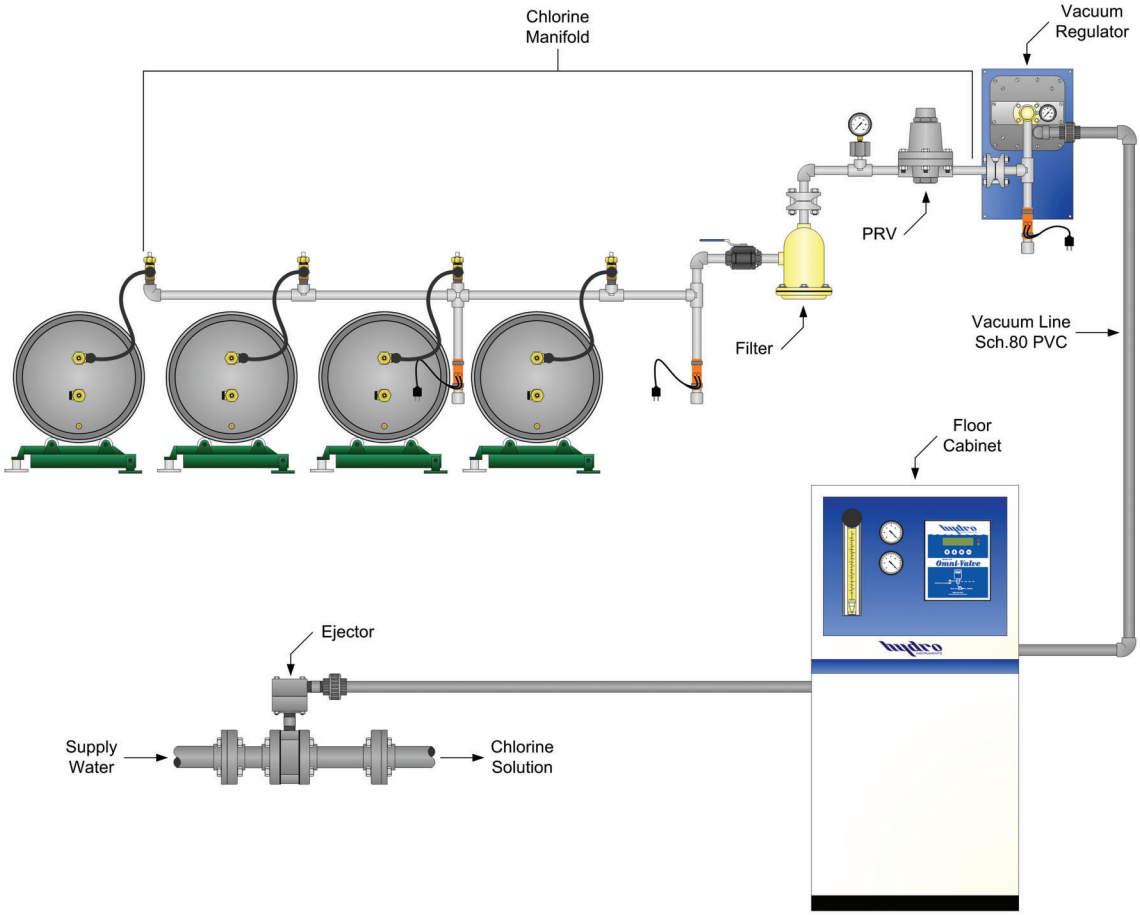

Ton Container Manifolds for Gas Withdrawal Systems

Design Considerations

Table of Contents

Introduction 4

I. Ton Containers and Supports 6

II. Eductor Tubes – Initial Liquid 6

III. Weighing Scales 7

IV. Chlorine Gas Valve Connection 8

V. Chlorine Gas Manifold 9

VI. Flexible Connectors 9

VII. Chlorine Gas Filter 10

VIII. Pressure Gauges & Switches 10

IX. Pressure Reducing Valves 10

X. Vacuum Regulators 10

XI. Automatic Switchover/Changeover 11

Figures:

1. Vapor Pressure of Liquid Chlorine 5
2. Ton Container 6
3. Fusible Plug 6
4. Lifting Bar 7
5. Basic Manifold Set 7
6. IVH-100-500 Isolation Valve Assembly 8
7. Vacuum Switchover System 11
8. Electronic Changeover System 12

INTRODUCTION

This discussion refers to vacuum solution gas systems used for withdrawing chlorine gas. Such systems employ a vacuum source (such as a venturi nozzle) to create a vacuum. Typically the chlorine gas is being injected into a water stream. A manual or automatic variable area orifice control valve is installed upstream of the vacuum source to control the chlorine gas feed rate in the vacuum section of the system. Further upstream, a rotameter type flowmeter is used to indicate the chlorine gas feed rate in the vacuum piping. Still further upstream, a vacuum regulator is installed to stop chlorine gas flow if no vacuum is applied and to allow chlorine gas to flow out of the pressurized chlorine manifold under vacuum when vacuum is applied to the vacuum regulator. Upstream of the vacuum regulators the chlorine gas is under pressure and this section is referred to the pressurized manifold section.

The following discussion covers the design considerations of pressurized manifold systems used to withdraw chlorine gas from one or more chlorine ton containers. This equipment is used to allow the withdrawal of pressurized chlorine gas from the ton containers and deliver the chlorine gas to one or more vacuum regulators without allowing any chlorine liquid to enter the vacuum regulators. This discussion also applies to sulfur dioxide and ammonia ton containers. In this discussion, chlorine ton containers will be referred to simply as containers.

Hydro Instruments recommends that, where possible, the use of pressurized chlorine manifolds should be avoided. When manifolds must be used, they should be designed to be as simple and short as possible. This is because any leak in the chlorine gas manifold can potentially allow all of the chlorine in the all of the containers to leak into the atmosphere.

Evaporation cooling limits the chlorine gas withdrawal rate for a single container to approximately 10 kg/hr (500 lbs/day) at 20ºC (68ºF) air temperature (8 lbs/day/F). For more detailed information refer to the Hydro Instruments Chlorine Handling Manual. This approximation is highly dependent on the ambient temperature and decreases with decreasing temperature. This is because heat is required to evaporate the liquid inside the container. At high rates of feed, the container temperature will decrease causing the pressure also to decrease. At lower pressures, the feed rate will be greatly limited and the vacuum regulators will close as if the containers were empty *(See Figure 1).* Therefore, any system with feed rate requirements above 10 kg/hr (500 lbs/day) will be required to feed chlorine from more than one container simultaneously.

For maximum safety, Hydro Instruments recommends that whenever possible, direct container mounted vacuum regulators be used and the system be designed with a vacuum manifold.

It should be mentioned that for higher feed rate systems, the minimum required number of containers online continues to increase and at some point, the designer will decide that it is more practical to use a liquid chlorine withdrawal system. Liquid chlorine withdrawal systems are typically considered for systems that require feed rates above 40 kg/hr (2000 lbs/day). Because of the added complexity, cost, and safety concerns associated with liquid chlorine withdrawal systems Hydro Instruments suggests that gas withdrawal systems should be used wherever possible. This discussion will not review liquid chlorine withdrawal systems.

Figure 1 – Vapor Pressure of Liquid Chlorine

(Calculated from data in CI Pamphlet 72)

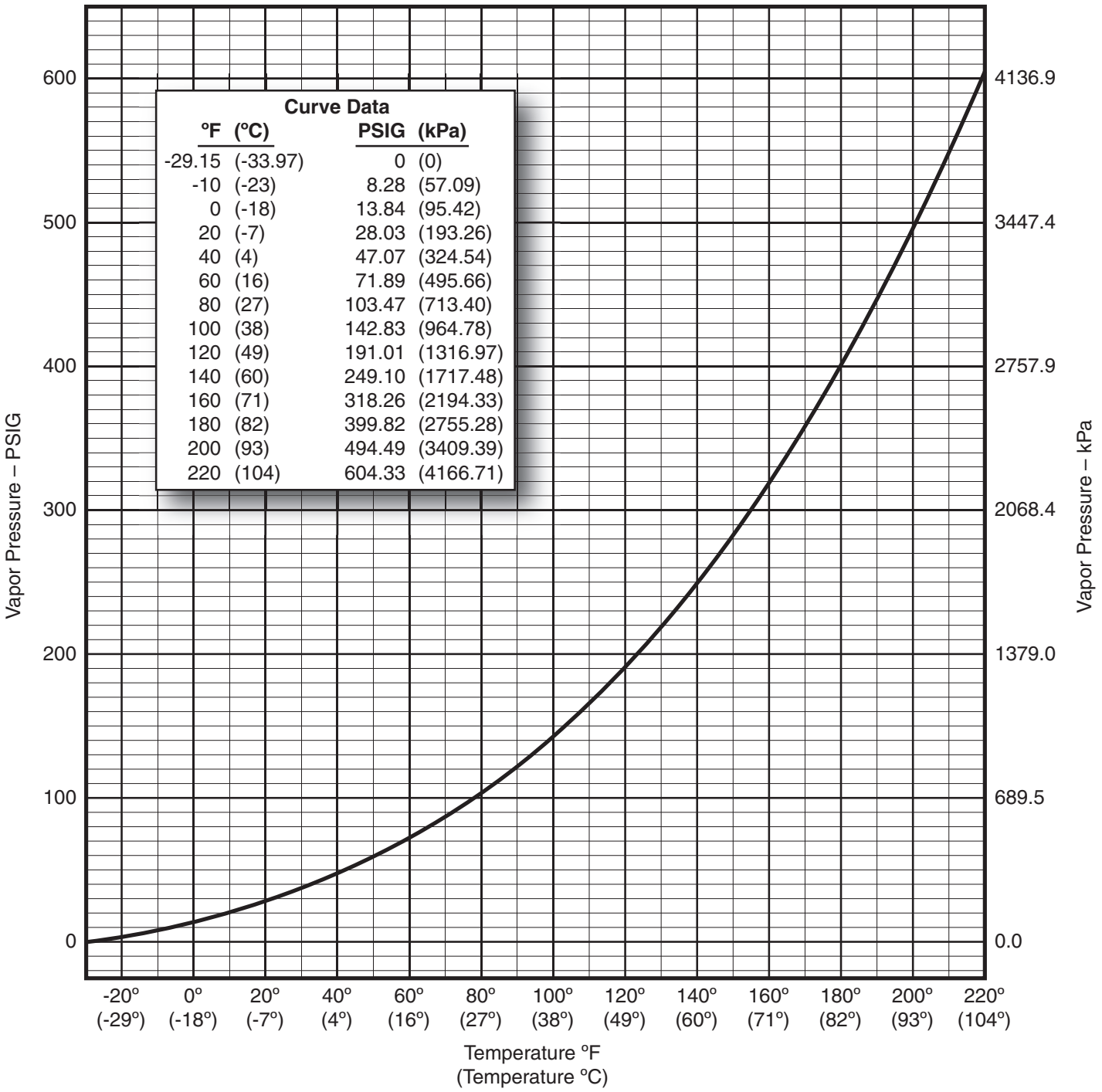

Curve Data

°F	(°C)	PSIG	(kPa)
-29.15	(-33.97)	0	(0)
-10	(-23)	8.28	(57.09)
0	(-18)	13.84	(95.42)
20	(-7)	28.03	(193.26)
40	(4)	47.07	(324.54)
60	(16)	71.89	(495.66)
80	(27)	103.47	(713.40)
100	(38)	142.83	(964.78)
120	(49)	191.01	(1316.97)
140	(60)	249.10	(1717.48)
160	(71)	318.26	(2194.33)
180	(82)	399.82	(2755.28)
200	(93)	494.49	(3409.39)
220	(104)	604.33	(4166.71)

SECTION I: TON CONTAINERS AND SUPPORTS

US standard ton chlorine containers are 80 inches (200 cm) in length; 30 inches (76 cm) in diameter; have an empty weight of 1300-1650 lbs (590-748 kg), and can hold 2000 lbs (907 kg) of chlorine. Similar containers are used in other countries. Each container must be supported by properly constructed trunnions. Each container has two valves on one of the ends. The protective cover should always be installed unless the container is installed and connected for use. Inside the container, the valves are each connected to a tube (eductor tube) that reach to opposite sides of the container. When the two valves are vertically aligned, the top valve will be connected to the top (gas section) of the container and the bottom valve will be connected to the bottom (liquid section) of the container *(See Figure 2).* Therefore, the top valve (gas valve) allows gas withdrawal and the bottom valve (liquid valve) allows liquid withdrawal. The container support trunnions must allow for the rotation of the containers so that the valves can be aligned vertically after being put in place. The equipment discussed here is intended only for gas withdrawal. Only the top valve (gas valve) can be used with this equipment. The bottom valve (liquid valve) should never be used with this equipment. The containers and manifold should not be installed under direct sunlight.

Figure 2 – Ton Container

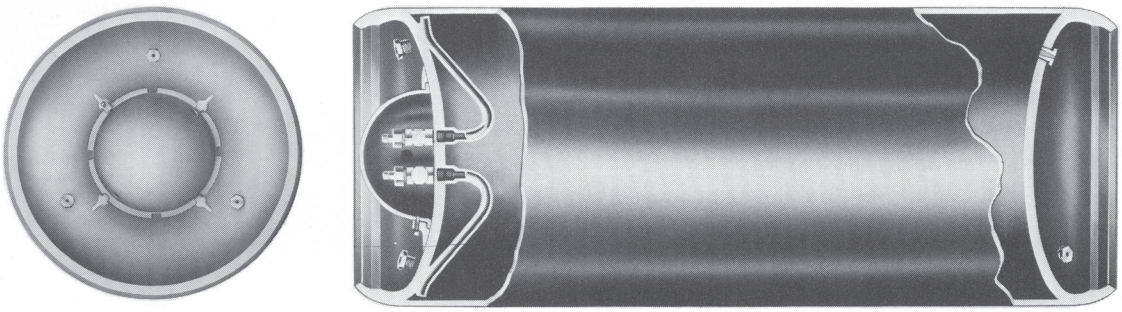

SECTION II: EDUCTOR TUBES – INITIAL LIQUID

It should be noted that every time a new container is put into service, the eductor tube connected to the gas valve is full of liquid chlorine *(See Figure 2).* This liquid will flow out of the gas valve before the chlorine gas begins to flow. The eductor tubes are constructed of 22 inch long ½" pipe. This liquid is sufficient to fill a 10" length of ¾" Schedule 80 pipe (25 cm length of DN20 pipe). The manifold must be designed to trap and evaporate this initial liquid before it can be allowed to reach the vacuum regulators or pool in the manifold itself. This is critically important because liquid chlorine will cause damage if allowed to enter the vacuum regulators. Also, over time if liquid chlorine is allowed to pool in the manifold it will cause more rapid corrosion than chlorine gas and increase the chances of a chlorine gas manifold leak. Therefore, low spots in the manifold should be avoided to avoid pooling liquid chlorine in the manifold.

Figure 3 – Fusible Plug

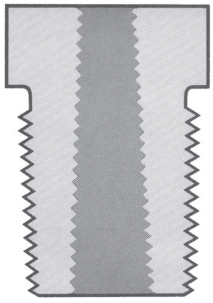

Fusible Plugs
Installed in the ends of each container you will also find one or more
fusible plugs. The fusible plugs have a metal core that is designed to melt at between 70ºC and 74ºC (158ºF to 165ºF). The intention is to relieve pressure and prevent rupture if the container is exposed to fire
or other high temperature.

SECTION III: WEIGHING SCALES

Electronic or hydraulic weighing scales can be employed to continually measure and indicate the amount of liquid chlorine remaining in the containers. This is the best way to know how much chlorine is remaining and to estimate when the current set of containers will be empty and require replacement. To save cost, one of each set of ton containers is sometimes fitted with a weighing scale operating on the assumption that all of the containers will feed at the same rate. If there are variations in temperature or height of the containers or if there are uneven restrictions to flow, then the containers may feed at greatly different rates. If this method is used, then care should be taken to ensure that all of the ton containers are at least kept at the same temperature and elevation. Also, this method does not assure an accurate measurement of the total amount of chlorine remaining in all containers.

Figure 4 – Lifting Bar

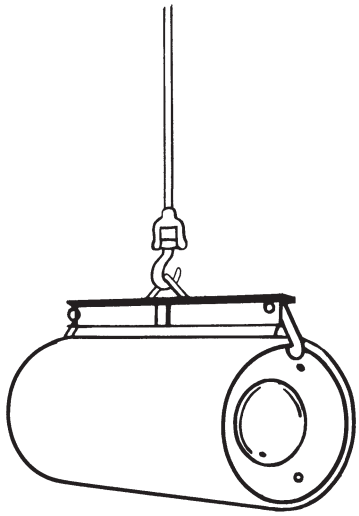

Moving Ton Containers

An appropriately sized overhead crane must be provided in order to be able to move the ton containers. Lifting bars specifically designed to grip and carry ton chlorine containers are available from Hydro Instruments. U.S. standard ton containers of chlorine weigh 3,300 to 3,650 lbs (1,500 to 1,659 kg).

Figure 5 – Basic Manifold Set

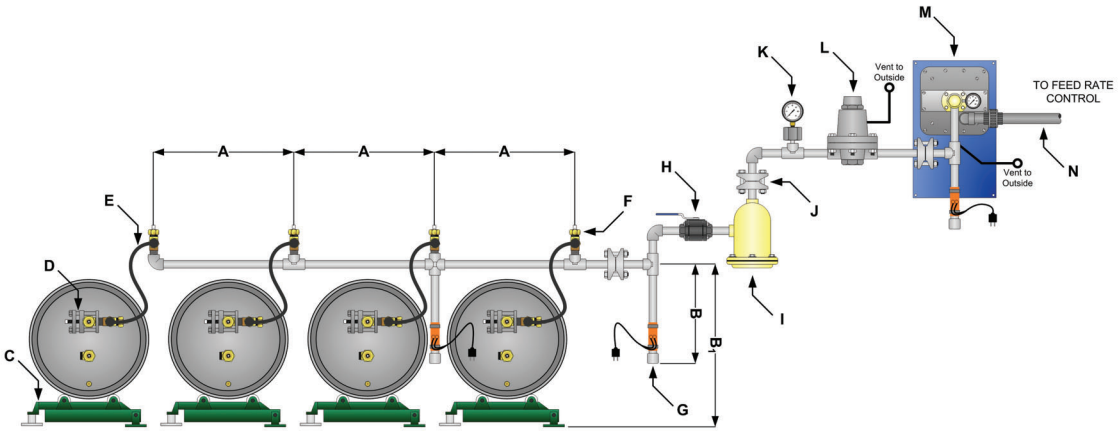

LEGEND

A – 30 inches (75 cm)

B – 40 inches (100 cm)

B_1 – Height from ground

C – Ton Container Support

D – Isolation Valve Assembly (See Figure 6)

E – Flexible Connector

F – Chlorine Valve (header valve)

G – Drip Leg with 25W Heater

H – Manual Chlorine Ball Valve

I – Chlorine Gas Filter

J – Manifold Union

K – Diaphragm Protected Pressure Gauge

L – Pressure Reducing Valve

M – Vacuum Regulator with drip leg, heater, and pressure gauge

N – Chlorine gas outlet under vacuum in schedule 80 PVC pipe

SECTION IV: CHLORINE GAS VALVE CONNECTION

(See Figure 5) The chlorine gas pressure manifold hard piping must be connected to the containers using flexible connectors. The flexible connectors have CGA-660 threaded fittings that are to be connected to chlorine valves (with a lead gasket seal) on both the container and on the hard manifold piping. The chlorine valves mounted on the manifold are typically referred to as the header valves (however, the valves on the manifold and the ton containers are typically the same). The flexible connectors are left connected directly to the manifold header valves. However, the flexible connectors must be disconnected and reconnected at the container valves every time the containers are changed. Frequently making this threaded connection creates the concern that the flexible connector may become weakened and break near this fitting. Further, if air (which contains water vapor) is allowed to enter the manifold (typically during changing containers) then this small amount of water vapor can cause major corrosion damage to the interior of the manifold. For these reasons, Hydro Instruments Model IVH-100-500 or IV-830 Isolation Valve assembly *(See Figure 6)* is used to improve the safety of the connection from the flexible connector to the chlorine valve on the container and to prevent corrosion of the manifold interior that would be caused by water vapor corrosion. The flexible connector is then connected to the chlorine valve outlet port on the Isolation Valve Assembly. When containers are changed, the yoke of the assembly is used to make and break the seal to the container valve and the valve on the Isolation Valve Assembly is closed and kept closed to prevent air from entering the manifold or chlorine from leaking out of the manifold. A new lead gasket must be used every time the containers are changed.

Figure 6 – IVH-100-500 Isolation Valve Assembly

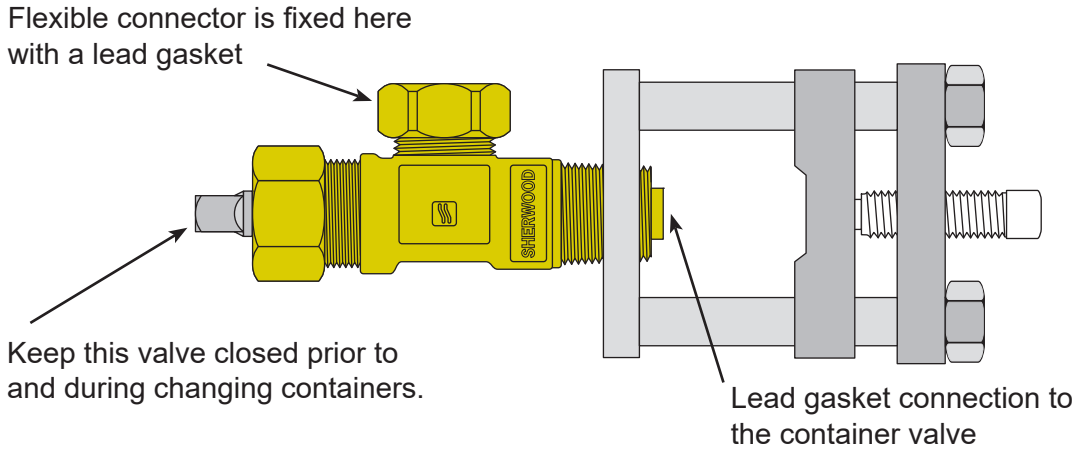

IVH-100-500

IV-830

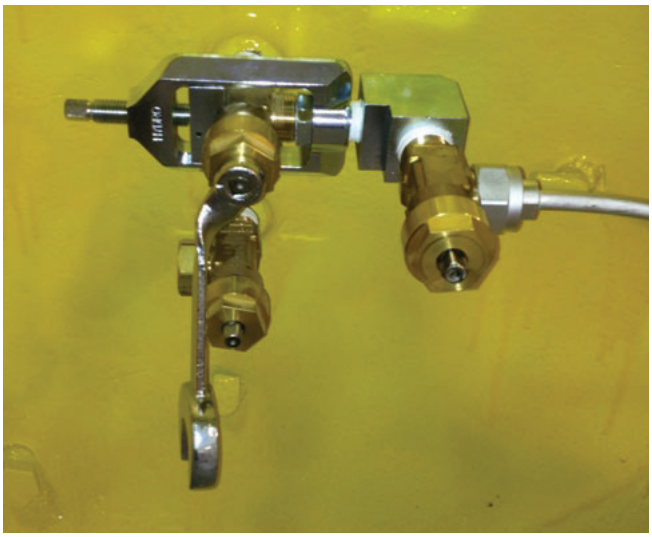

SECTION V: CHLORINE GAS MANIFOLD

(See Figure 5) The manifold hard piping is constructed of ¾" or 1" Schedule 80 seamless steel pipe with 3000 PSI (200 bar) rated forged steel fittings. Only chlorine resistant thread sealant should be used. Monel or Hastelloy C-276 pipe and fittings could also be used, but the price of these materials is much higher. Plastic materials should NEVER be used to contain chlorine under pressure. A horizontal section of the manifold should be constructed in front of and above the containers on the side with the valves. The horizontal collection section should be installed at a height of approximately 48" (1.2 m) (NOTE: must be higher than the top of the ton containers). A clearance of at least 8" (21 cm) must be allowed at both ends of the containers in order to leave room for the lifting bar. For each container, a header valve should be installed on the horizontal piping directly in front of the container valves. These header valves should be spaced at approximately 30" (76 cm) separation to match the separation of the valves on the ton containers. The horizontal pipe should be sloped at approximately 2 to 3 degrees in the direction of the gas flow in order to allow liquid chlorine to flow into the drip legs. After three or four containers, a vertical section of pipe (drip leg) should be installed to capture the liquid from the eductor tubes. This drip leg should provide 10" (25 cm) in length for each container (i.e., for four containers, the drip leg should be 40" (1 m) long). A 25-Watt heater must be installed and operated continuously toward the bottom of the drip leg to keep it hot at all times to ensure evaporation of any liquid chlorine. (It does not matter if the containers are being used in a hot or cold climate. There will always be liquid in the eductor tubes that needs to be evaporated using the drip leg and heater.) A manual ball valve should be included after the drip legs in order to allow isolation of the ton containers.

SAFETY NOTE: It is very important that before assembly, every piece of the manifold is carefully cleaned and dried. Any impurities could react with the chlorine and create more debris to clog filters and dirty equipment downstream.

All manifolds including components mounted in the manifold must be painted appropriately to avoid corrosion from the outside environment.

The manifold piping must be installed in a way that allows convenient access and escape path for operators.

All chlorine pressure manifolds should be maintained or replaced on a preventative maintenance schedule to prevent corrosion on the inside of the pipes from causing a leak.

All manifolds must be flowing from cold to hot if there are temperature variations in order to avoid liquefaction inside the manifold piping.

SECTION VI: FLEXIBLE CONNECTORS

(See Figure 5) Flexible connectors connect one or more ton containers to the gas manifold. They are made from 3/8 in. copper tubing to provide flexibility and suitable wall thickness, and are cadmium plated to resist corrosion.

Connectors are available in multiple lengths (for example, 6 ft and 10 ft) to suit installation requirements. Both ends use CGA 660/820 capture nut connections with lead gaskets.

Inspect flexible connectors regularly and at each ton container change out. Corrosion at the joints or a cracking sound during flexing indicates material degradation and requires replacement.

Service life depends on usage and site conditions. Each connector includes a punch card to help track use and estimate replacement intervals. The tag provides 24 punches, but this does not guarantee 24 uses. Replace the connector after 24 uses or 12 months, whichever occurs first.

SECTION VII: CHLORINE GAS FILTER

(See Figure 5) Chlorine Gas filters are specifically designed to filter impurities in order to protect the vacuum regulator and other downstream equipment. All container manifold systems should incorporate such a filter. In order to reduce corrosion and improve filter performance, it is best to design the manifold so that the filter will not frequently have liquid chlorine resting inside it. Such filters typically employ some type of fiberglass filter media. The filters require periodic cleaning and filter media replacement at a rate that is dependent on the chlorine gas feed rate, the quality of the chlorine gas, and the filter design.

SECTION VIII: PRESSURE GAUGES & SWITCHES

(See Figure 8) Each pressure manifold should have a tantalum diaphragm-protected pressure gauge in order to indicate the chlorine gas pressure in the manifold. The diaphragm protector must be designed specifically for chlorine gas application. Optional pressure switches (also requiring diaphragm protection) are available to provide an alarm to indicate when the pressure in the manifold has dropped indicating that the gas supply is empty (or being limited by evaporation cooling, clogged filters, or any other reason).

NOTE: If the pressure manifold will experience vacuum condition, then a compound pressure gauge can be used (with suitable diaphragm protector) to avoid vacuum damaging the pressure gauge.

SECTION IX: PRESSURE REDUCING VALVES

(See Figures 5, 7, 8) The manual pressure reducing valve is used to reduce the pressure prior to entry into the vacuum regulator to a controlled stable pressure in the range of 1 to 3 bar (15 to 45 PSIG). Doing this helps to ensure that the chlorine gas will not condense into liquid before entering the vacuum regulator. Reducing and stabilizing the pressure at the vacuum regulator inlet also serves to protect the vacuum regulator from high inlet pressure and extend the life of the vacuum regulator.

SECTION X: VACUUM REGULATORS

(See Figure 5) As stated above, the purpose of the manifold is to provide sufficient chlorine gas to the vacuum regulator and to prevent liquid chlorine from entering the vacuum regulator. The purpose of the vacuum regulator is to prevent chlorine gas flow unless a vacuum is present and to reduce the chlorine gas from pressure to vacuum. If liquid chlorine enters the vacuum regulator, the liquid will damage it and most likely cause a significant chlorine leak. This must be avoided by proper operation and manifold design. The pressure manifold must be designed with drip legs and heaters in a way that prevents the possibility of chlorine condensing and entering the vacuum regulator in the liquid phase. The inlet of the vacuum regulator assembly is constructed of the same class of steel pipe and fittings as the manifold. However, the outlet of the vacuum regulator is under vacuum and so it is constructed of Schedule 80 PVC pipe and fittings. In case the vacuum regulator inlet valve is unable to fully seal (due to impurities and particles), there is a built in vent valve that directs leaking gas to the outside air. This vent valve prevents pressure in the vacuum portion of the system from rising above 1 PSI (less than 0.1 bar).

Figure 7 – Vacuum Switchover System

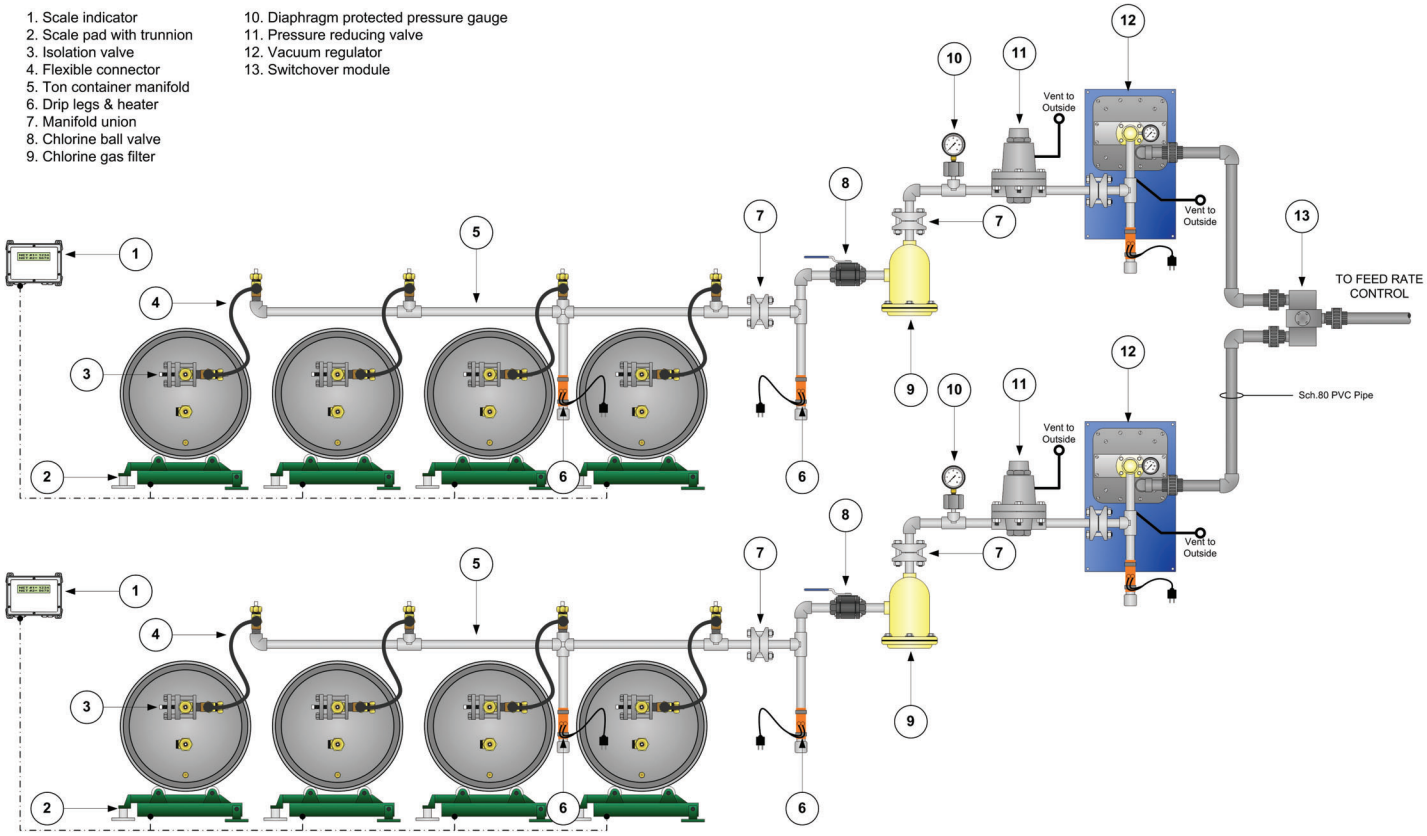

SECTION XI: AUTOMATIC SWITCHOVER/CHANGEOVER

(See Figures 7 & 8) In order to prevent an interruption of chlorine gas feed, automatic switchover systems can be provided that will automatically change from a feeding set of containers to a standby set of containers. Such systems consist of two sets of containers, manifolds, (optionally) vacuum regulators, and a system or device that will automatically switch sources when the operating source goes empty.

Vacuum Switchover

(See Figure 7) The more simple and inexpensive option is the vacuum switchover module. The vacuum switchover module is mounted in the vacuum piping after the vacuum regulators. The design relies on two diaphragms and a spring-loaded valve to switch supply sources upon rising vacuum level (indicative of reduction in chlorine gas supply). These devices require no external adjustments and offer the inherent safety associated with being in the vacuum line and not requiring the addition of more equipment into the pressure manifold section. The device is intended to fully empty the containers and does not allow any adjustment.
If regulations require that a certain amount of liquid chlorine be left in the containers, then this type of device is not appropriate.

Figure 8 – Electronic Changeover System

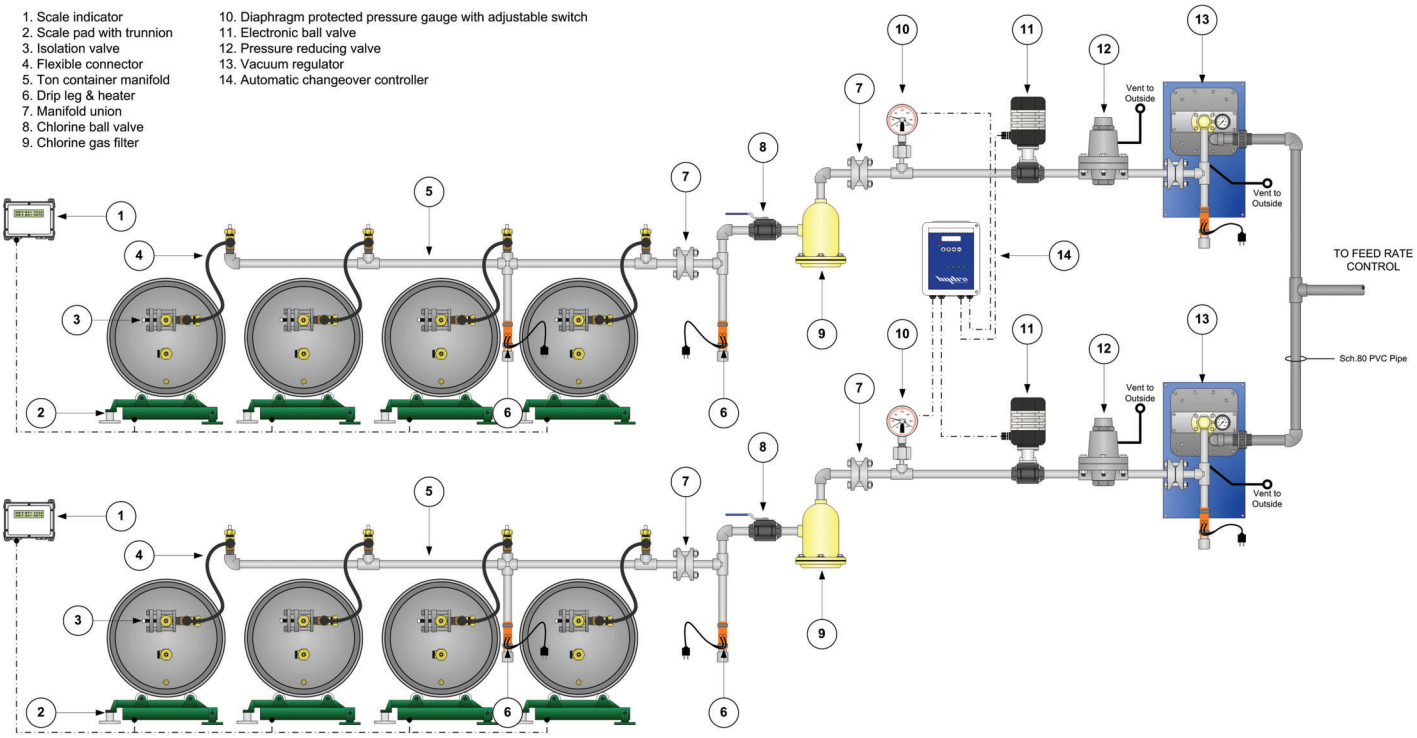

Electronic Changeover Systems

(See Figure 8) The electronic changeover systems are also designed to automatically transfer chlorine feed from the nearly empty set of containers to the standby set of containers to avoid chlorine feed interruption. The system relies on falling pressure switches installed in each manifold. The pressure in the manifold should remain fairly constant at about 90 PSI (6 bar) until the liquid chlorine is nearly gone at which time the pressure will begin to drop. The pressure switch may be set in the range of 15 to 45 PSIG (1 to 3 bar). Adjustment of the pressure switch allows some control over the amount of chlorine remaining in the containers. The pressure switch signals are directed to a changeover controller that also controls an electronic ball valve in each manifold. These systems are much more complicated and expensive than vacuum switchover systems.

Represented by

hydro INSTRUMENTS

PROUDLY MADE IN USA

ISO 9001 Certified

600 Emlen Way, Telford, PA 18969 • Telephone: (215) 799-0980 • Fax: (215) 799-0984
Toll Free in the U.S.: 1 (888) 38-HYDRO • www.hydroinstruments.com • sales@hydroinstruments.com